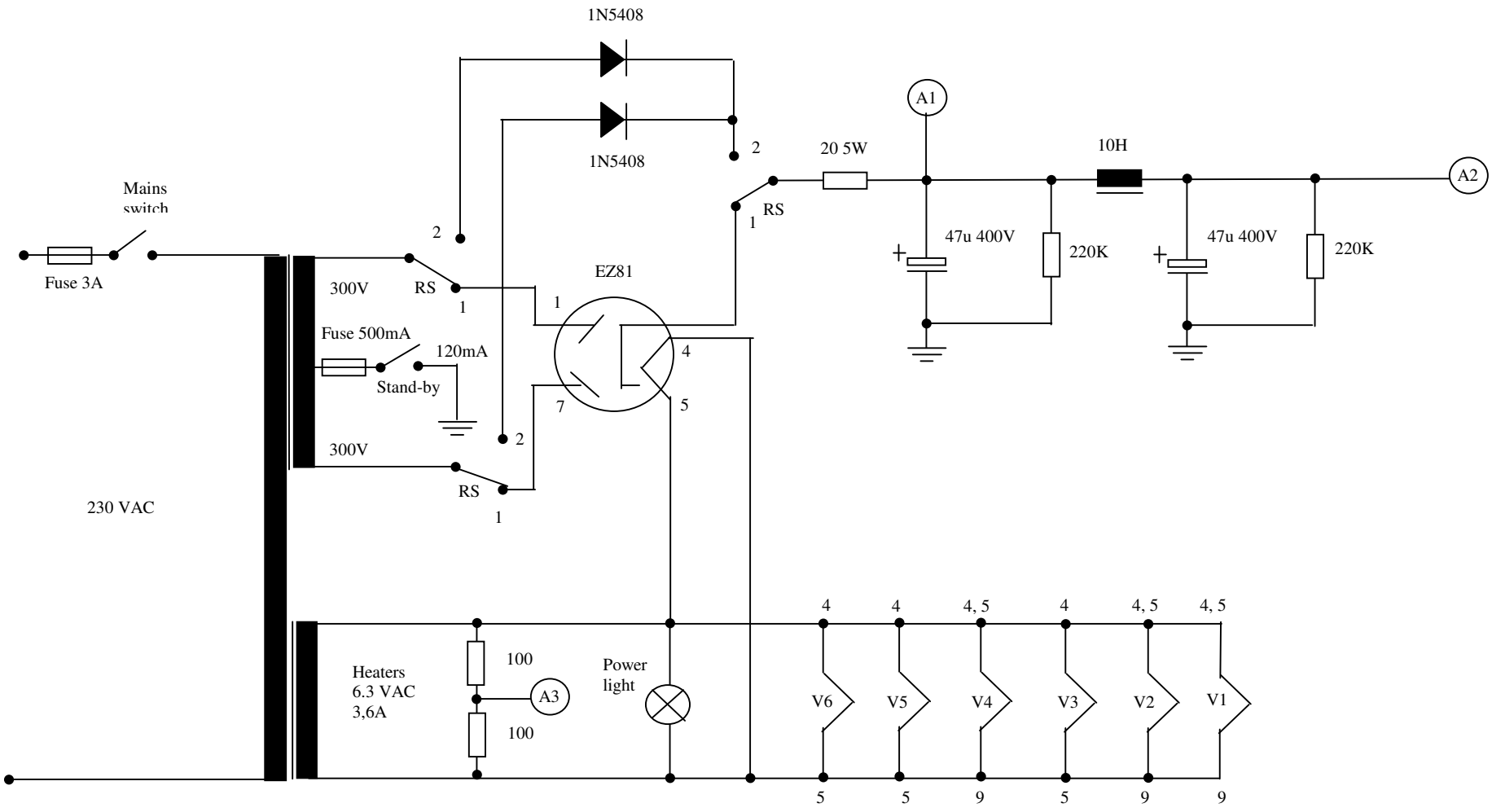

RS = Rectifier Switch

Rikstone Amps		
Rikstone	C15	Power supply
2004-02-09	Ver 1.5	RiK